Twist-Off 63 OL FD138S

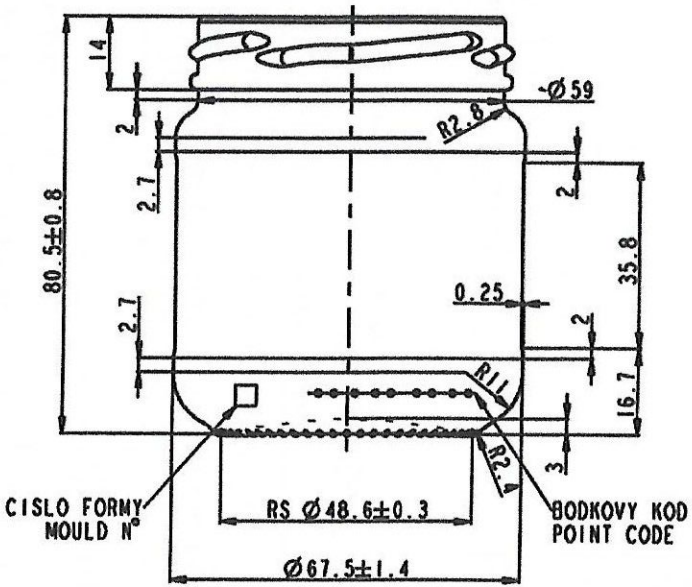

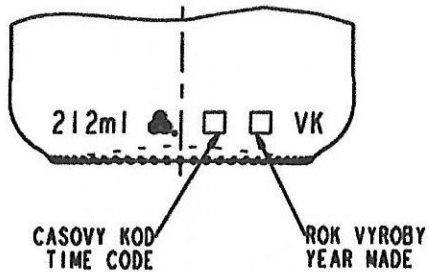
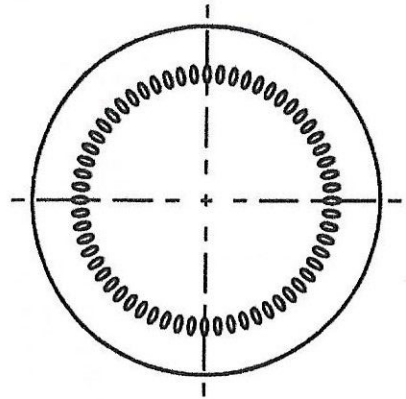
PREVEDENIE DNA
BOTTOM VIEW